Inhaltsverzeichnis
Table of contents

ATEX- / IECEx approval

Shomal Iran **ATEX 117157**

Zertifikat, inkl. Anlage / Certificate, incl. Annex	1
Ex Prüfbericht / Ex Test Report (ExTR - Cover Sheet)	2
Anlagen zum Ex Prüfbericht / Annexes to ExTR	3
Laborprüfberichte / Laboratory test reports	4
Herstellerdokumentation / Manufacturer's documentation	5
Vertrag / Contract	6

ELBA

STRONG LINE®

1

2

3

4

5

6

7

8

9

10

11

12

EP10404

ELBA Print

www.elbaprint.com

813 551 / 100 281 159

(1) # EC-TYPE EXAMINATION CERTIFICATE

(2) Equipment and Protective Systems intended for use in Potentially Explosive Atmosphere - **Directive 94/9/EC**

(3) EC-Type-Examination Certificate Number

TÜV 11 ATEX 7157 U

(4) Equipment: **600 Range of Adaptors and 700 Range of Reducers**
(5) Manufacturer: **Shomal Engineering & Manufacturing (Pirooz) Ltd.**
(6) Address: **Salmanshahr Industrial Park, Salmanshahr, Mazandaran Iran**

(7) This equipment and any acceptable variation thereto are specified in the schedule to this certificate and the documents therein referred to.

(8) The TÜV Rheinland Notified Body for ex-protected products of TÜV Rheinland Industrie Service GmbH, Notified Body No. 0035 in accordance with Article 9 of the Council Directive 94/9/EC of 23 March 1994, certifies this equipment has been found to comply with the Essential Health and Safety Requirements relating to the design and construction of equipment and protective systems intended for use in potentially explosive atmosphere, given in Annex II to the Directive.

The examination and test results are recorded in the confidential report 557/Ex157.00/11

(9) Compliance with the Essential Health and Safety Requirements, with the exception of those listed in the schedule of this certificate, has been assessed by reference to:

EN 60079-0: 2009 EN 60079-1: 2007 EN 60079-7: 2007 EN 60079-31: 2009

(10) If the sign "X" is placed after the certificate number, it indicates that the equipment is subject to special conditions for safe use specified in the schedule to this certificate.

(11) This EC-Type-Examination Certificate relates only to the design and specification for construction of the equipment or protective system. It does not cover the process for actual manufacture or supply of the equipment or protective system, for which further requirements of the directive are applicable.

(12) The marking of the equipment shall include the following:

Ex II 2 G D Ex d IIC Gb / Ex e IIC Gb / Ex t IIIC Db

TÜV Rheinland Certification Body for explosion protected equipment Cologne, 15th May 2013

Dipl.-Ing. Klauspeter Graff

(Translation)
This EC-Type-Examination Certificate without signature and stamp shall not be valid.
It may be circulated only without alteration.
Extracts or alterations are subject to approval by the:
TÜV Zertifizierungsstelle für Ex-Schutz-Produkte
TÜV Rheinland Industrie Service GmbH, Am Grauen Stein, 51105 Köln
Tel. +49 (0) 221 806-0 Fax. + 49 (0) 221 806 114

www.tuv.com

TÜVRheinland®
Precisely Right.

10/201 4.08 E A4 ® TÜV, TUEV and TUV are registered trademarks. Utilisation and application requires prior approval.

(13) Annex

(14) # EC - Type Examination Certificate
TÜV 11 ATEX 7157 U

(15) Description of equipment:

15.1 Equipment and type:

600 and 700 Series range of adaptors and reducers with non ISO Metric thread form

15.2 Description

The 600 and 700 Series are ranges of hexagonal bodied metallic adaptors and reducers. Each compromises a hollow body with an external male thread inclusive a loose fitting "o" ring seal and an internal female thread. The devices are used to convert existing cable entry aperture to a different thread form and/or size. Thread combinations are such that minimum wall thickness should be maintained.
Reducers convert an existing cable entry apertures thread form size to accommodate a certified device having smaller thread form size.
Adaptors convert an existing cable entry aperture thread form size to accommodate a certified device having a larger thread form size.

This Type-Examination Certificate without signature and official stamp shall not be valid.
This certificate may be circulated only without alteration. Extracts or alterations are subject to approval by.
TÜV Zertifizierungsstelle of TÜV Rheinland Industrie Service GmbH,

TÜV, TUEV and TUV are registered trademarks. Utilisation and application requires prior approval.
9/505 01.07

15.3 Technical Data

Service temperature T_s= -20°C to +75°C

IP 66

Nominal Thread Size*	Applicable Torque [Nm]
M16 & M20	40
M25	55
M32	65
M40	80
M50	100
M63	195
≥M75	310
For other thread forms, equivalent thread size corresponding to ISO Metric should be used	

Spreadsheet 1: Torque table

9/505 01.07 TÜV, TUEV and TUV are registered trademarks. Utilisation and application requires prior approval.

TÜVRheinland®
Precisely Right.

(16) Test Report No. 557/Ex 157.00/11

(17) Special Conditions for safe use / Remarks for safe usage:

1. Two adaptors installed in series, is not permitted under certification.
2. Do not use a Stopping plug to close off the female thread of the Adaptor/Reducer.
3. Ensure that the product is certified to the same method of protection as the equipment to which it is to be installed.
4. Ensure that the correct thread form and size is selected for the cable gland entry of the enclosure to which the product will be fitted.
5. Ensure that the product can maintain the same Ingress Protection levels as the equipment to which it is to be installed.
6. Change in dimensions, marking, and finish of the product is not permitted.
7. Usage other than those specified in product catalogue is not permitted.
8. See product packaging for the Material of Construction.
9. The products shall not be used in enclosures where the temperature, at the point of mounting is outside the range of -20°C to +75°C.

(18) Basic Safety and Health Requirements

Fulfilled by the afore mentioned standards.

TÜV Rheinland Certification Body for explosion protected equipment Cologne, 15th May 2013

Notified body • TÜV Rheinland Industrie Service

Dipl.-Ing. Klauspeter Graffi

This Type-Examination Certificate without signature and official stamp shall not be valid.
This certificate may be circulated only without alteration. Extracts or alterations are subject to approval by.
TÜV Zertifizierungsstelle of TÜV Rheinland Industrie Service GmbH,

TÜV, TUEV and TÜV are registered trademarks. Utilisation and application requires prior approval.
9/505 01.07

TÜVRheinland®
Genau. Richtig.

Prüfbericht

Test and Assessment Report

Nr.: 557 / EX 157.00 / 11

EG-Baumusterprüfung für Geräte und Komponenten zur Verwendung in explosionsgefährdeten Bereichen (Richtlinie 94/9/EG, Anhang III)

EC-Type Examination for Equipment and Components Intended for Use in Potentially Explosive Atmospheres (Directive 94/9/EC, annex III)

Gegenstand: Gerät/Komponente Typ Subject: Equipment/Component type	**600 Range of Adaptors and 700 Range of Reducers**
Hergestellt und zur Prüfung vorgelegt Manufactured and submitted for examination	**Shomal Engineering & Manufacturing (Pirooz) Co.**
Anschrift Address	**Salmanshahr Industrial Park, Salmanshahr, Mazandaran, Iran**
Prüfgrundlage Basis for examination	**Anhang II der Richtlinie 94/9/EG** **Annex II of Directive 94/9/EC**
Verwendete Normen Standard basis	**EN 60079-0:2009; EN 60079-1:2007; EN 60079-7:2007; EN 60079-31:2009**
Prüfgrundlage für Sicherheits- und Gesundheitsanforderungen, die nicht von den verwendeten Normen abgedeckt werden Basis for those health and safety requirements not covered by the standard basis	**Entfällt** **Not relevant**
Schutzartkennzeichen Code for type of protection	Ex **II 2 G D** Ex d IIC Gb / Ex e IIC Gb / Ex t IIIC Db
Angebotsnummer Offer number	
Auftragsnummer der Prüfstelle Testing station order number	**10743353**

Dieser Prüfbericht darf nur vollständig und unverändert vervielfältigt werden.
This test and assessment report may only be reproduced in its entirety and without change.

1) Gegenstand und Typ / Subject and type

600 and 700 Series range of adaptors and reducers with non ISO Metric thread form

2) Allgemeine Produktbeschreibung / General product information

The 600 and 700 Series are ranges of hexagonal bodied metallic adaptors and reducers. Each compromises a hollow body with an external male thread inclusive a loose fitting "o" ring seal and an internal female thread. The devices are used to convert existing cable entry aperture to a different thread form and/or size. Thread combinations are such that minimum wall thickness should be maintained.

Reducers convert an existing cable entry apertures thread form size to accommodate a certified device having smaller thread form size.

Adaptors convert an existing cable entry aperture thread form size to accommodate a certified device having a larger thread form size.

3) Dokumentation des Herstellers / Manufacturer's Documents

Title	Drawing No.	Rev. Level	Date
Adaptor 600.pdf	Adaptor 600 Series	G	2012-10-20
Reducer 700.pdf	Reducer 700 Series	G	2012-10-20
Oring-900.pdf	900	C	2012-02-21
EPDM Technical Data Sheet	-	-	-
Safety maintenance and operating instruction	WI-06(PCD-P-01)/01		

Spreadsheet 1: Documents

4) Technische Daten / Technical Data

Service temperature T_s= -20°C to +75°C
IP 66

Nominal Thread Size*	Applicable Torque [Nm]
M16 & M20	40
M25	55
M32	65
M40	80
M50	100
M63	195
≥M75	310
For other thread forms, equivalent thread size corresponding to ISO Metric should be used	

Spreadsheet 2: Torque table

Dieser Prüfbericht darf nur vollständig und unverändert vervielfältigt werden.
This test and assessment report may only be reproduced in its entirety and without change.

5) Kennzeichnung/ Marking

Marking of small components according to EN 60079-0:2009 clause 29.9
Refer to drawing Adaptor 600 Series and Reducer 700 Series.

6) Stückprüfungen/ routine tests

The manufacturer must perform the routine test according the EN 60079-0 and necessary tests, to ensure that the manufactured equipment is in accordance with the documentation, which was submitted to the notified body in addition to the prototype or example. He must perform the routine testes, which are required in the relevant European standards.
The routine test doesn't substitute the conformity assessment procedures (art. 8 of directive 94/9/EC) which in connection with the module EC-type examination is necessary and which the manufacturer has to fulfil according annex IV to VII of the directive 94/9EC.

7) Auflagen/Bedingungen für die sichere Verwendung bzw. Verwendungshinweise/ Special conditions for safe use

N/A, component

8) Sicherheitstechnisch relevante Informationen /Safety relevant information

The information provided under 4), 7) and the user manual must be taken into account.

1. Two adaptors installed in series, is not permitted under certification.
2. Do not use a Stopping plug to close off the female thread of the Adaptor/Reducer.
3. Ensure that the product is certified to the same method of protection as the equipment to which it is to be installed.
4. Ensure that the correct thread form and size is selected for the cable gland entry of the enclosure to which the product will be fitted.
5. Ensure that the product can maintain the same Ingress Protection levels as the equipment to which it is to be installed.
6. Change in dimensions, marking, and finish of the product is not permitted.
7. Usage other than those specified in product catalogue is not permitted.
8. See product packaging for the Material of Construction.
9. The products shall not be used in enclosures where the temperature, at the point of mounting is outside the range of -20°C to +75°C

Red markings in the documents have to be corrected.

9) Prüfergebnisse aus unterbeauftragten Laboren / Test results from external laboratories

See Listing of Checklists / Lab Test Reports annexed to this report.

Dieser Prüfbericht darf nur vollständig und unverändert vervielfältigt werden.
This test and assessment report may only be reproduced in its entirety and without change.

TÜVRheinland®
Genau. Richtig.

TÜV Rheinland Industrie Service GmbH
Prüflaboratorium für Ex-Schutz
Haumannplatz 4
D – 45130 Essen

Essen, den 25.04.2013

Dipl.-Ing.
Christian Lechtenböhmer

Dipl.-Ing. (FH)
Thiemo Czarnetzki

Anhang: Annex:	Anlage 1: attachment 1:	Check against the updated standards
	Anlage 2: attachment 2:	SIRA assessment report R51A7158A
	Anlage 3: attachment 3:	SIRA internal report for administrative variation R51A15179A

Dieser Prüfbericht darf nur vollständig und unverändert vervielfältigt werden.
This test and assessment report may only be reproduced in its entirety and without change.

Order			
Order No.	10743353	**Date of order:**	
Kind of order:	transscription	**Offer:**	
Type of Certificate:	ATEX		
Equipment:	Adaptor, reducer, plug	**Type:**	Adaptor 600 series, Reducer 700 series, Plug 800 series
Manufacturer:	Shomal Engineering & Manufacturing (Pirooz) Co.	**Customer contact:**	Farshid Alsafi
Number of Certificate	TÜV11ATEX7156X	**Marking:**	Ex d IIC Gb / Ex e IIC Gb / Ex t IIIC Db
Standards	60079-0; 60079-1, 60079-7 60079-31	**Ingress protection:**	**IP66**
Type of protection		Ex d, Ex e, Ex t	
Classification of installation and use		Adaptor, reducer, plugs	
Rated ambient temperature range (°C)		-20°C to +75°C	
Language of Report:		englisch	

Nr.	**Testsample Description**
A	Adaptor, reducer, plug

No	Standard	Clause	Test	Type	Performed by:	Remark / Advice:	Test sample Number	Date	QMA 03.103.02 .xy	Test Result pass/fail
47	IEC 60079-1: 2007	Annex C.3.3.2	Over-pressure test for blanking elements	Überdruck 20bar bzw 30 bar	(TÜV) bei Schorch	Judge by technical drawings	**A**		18	Pass
50	IEC 60079-1: 2007	Annex C.3.4.3	Over-pressure test for thread adapters	stat. Überdruckprüfung 20bar bzw. 30bar	(TÜV) bei Schorch	Judge by technical drawings	**A**		18	Pass

Anlage 1 zum Prüfbericht

Annex 1 of Test and Assessment Report-No.

557 / Ex 157.00 / 11

Check against the updated standards

The check against the updated standards revealed, that following clauses are subject to significant changes:

EN 60079-1:2007 Annex C.3.3.2
EN 60079-1:2007 Annex C.3.4.3

As they are judged by the technical drawings, it is deemed, that these changes don't have impact on the device, based on the constructional data provided.
The assessment report from SIRA is still valid.
Due to the above, the following checklists were omitted:

- Annex II of Directive 94/9/EC
- EN 60079-0: 2009
- EN 60079-1:2007
- EN 60079-31: 2009

The annex is composed of 1 page.

TÜV Rheinland Industrial Services 135617

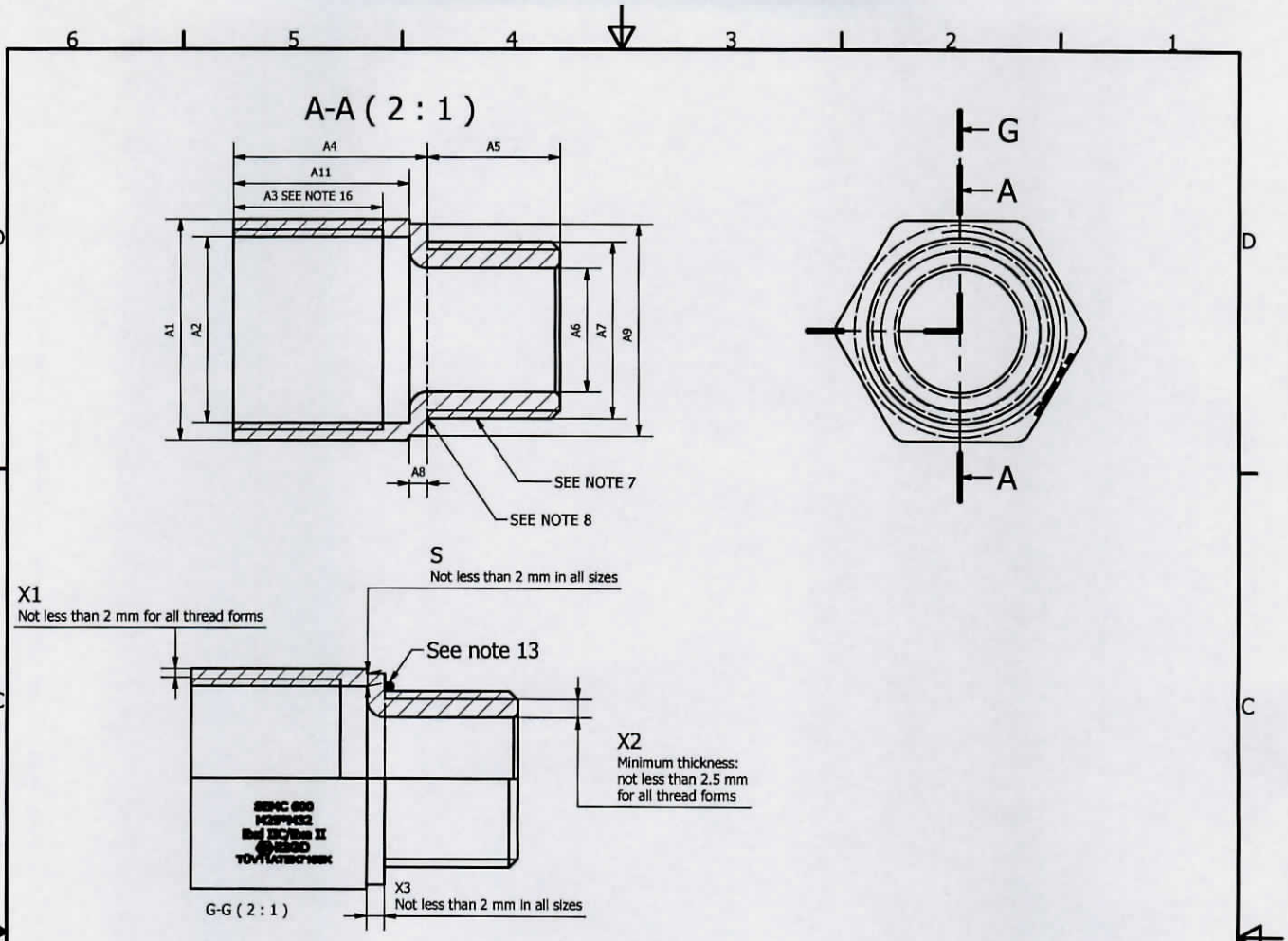

NOTES:

1. FUNCTION: PROVIDES A MEANS OF OUTDOOR OR INDOOR CONNECTION BETWEEN CABLE ENTRY DEVICES AND EQUIPMENT HAVING DISSIMILAR THREADS.
2. SPECIFICATION: Ⓔx II 2 GD "Ex d IIC / Ex e IIC / Ex t IIIC" IN ACCORDANCE WITH THE RELEVANT REQUIREMENTS OF "EN 60079-0: 2009" AND "EN 60079-1: 2007" AND "EN 60079-7: 2007" AND "EN 60079-31: 2009".
3. APPROVAL: SUITABLE FOR USE ON ANY ZONE 1, ZONE 2, ZONE 21, AND ZONE 22, APPROVED EQUIPMENT HAVING FLAMEPROOF "Ex d" OR INCREASED SAFETY "Ex e" METHODS OF PROTECTION.
4. CERTIFICATION: COMPONENT CERTIFICATE No.: TÜV11 ATEX 7157U FOR ADAPTORS WITH FEAMALE THREAD OTHER THAN ISO METRIC THREAD FORM, AND EQUIPMENT CERTIFICATE No.: TÜV11ATEX7156X FOR ADAPTORS WITH ISO METRIC FEMALE THREAD FORM.
5. MATERIAL: BRASS TO BS EN 12164: 2011 Grades CW604N & CW614N AND BS EN 12167: 2011 Grade CW612N OR EQUIVALENT HAVING THE SAME OR GREATER TENSILE STRENGTH; ALUMINUM TO BS 1474:1972, GRADE HE30 (LESS THAN 6% Mg) OR EQUIVALENT HAVING THE SAME OR GREATER TENSILE STRENGTH; MILD STEEL TO BS 970:1991 part 1 Grade 220 M07; STAINLESS STEEL TO BS 970: 1991 Part 1 Grades 302S31, 303S31, 303S42, 304S11 304S15, 304S31, 316S11, 316S13, 316S31, 316S33. BS970:1987 part 4 Grades 302S25, 303S21, 303S41, 304S12, 304S15, 316S12, 316S16.
6. FINISH: ADAPTORS MAY BE COATED OR PLATED TO SUIT THE APPLICATION (6 TO 20 MICRONS).
7. ALTERNATIVE EQUIVALENT THREAD FORMS :
   I. ISO TO BS 3643 : 1981 MEDIUM FIT, 6G FOR EXTERNAL THREADS, 6H FOR INTERNAL THREADS.
   II. NPT TO USAS B 2.1 : 1968 GAUGING TO CLAUSE 36.
   III. BSPP TO BS 2779 : 1993 CLASS A FULL FORM FOR EXTERNAL THREADS.
8. NO UNDER CUT PERMITTED; THE THREAD IS RUN OUT HERE: DIE TO SCREW UP TO 1.5 MM GAUGE FACE FROM THE LAST FULL THREAD.
9. ALL DIMENSIONS *ARE IN MILLIMETRES* AND ARE SHOWN IN DWG NO. 600 SHEET 2/2.
10. TOLERANCES: ±1mm for A1,+0.3 FOR A6, and ±0.2 FOR ALL OTHER DIMENSIONS.
11. MARKING METHOD: SURFACE ENGRAVING.
12. MARKING DETAILS: ALL ADAPTORS ARE TO BE STAMPED ON THE CIRCULAR BAND OR ON THE HEXAGON FACE AS SHOWN ON THE ABOVE DRAWING, e.g. SEMC 600 M25 * M32 Ex d IIC / Ex e IIC / Ex t IIIC Ⓔx II2GD TÜV11ATEX7156X .
13. INGRESS PROTECTION: ADAPTORS SATISFIES THE REQUIREMENTS OF THE IP66 TO BS EN 60529:1992 BY THE USE OF A CAPTIVE O-RING (SEE NOTE 14).
14. MATERIAL FOR THE CAPTIVE O-RING IS: ETHYLENE PROPYLENE DIEN MONOMER (EPDM).
15. INSIDE BORE 'A6' SHALL BE FREE OF ANY SHARP EDGES BY REMOVAL OF BURRS.
16. MAXIMUM FEAMLE THREAD LENGTH: THE FEMALE THREAD LENGTH TO ACCOMMODATE CYLINCRICAL MALE THREADS UP TO 15MM THREAD LENGTH (20MM FOR BBPP SIZE 1" AND LARGER).

SHOMAL ENGINEERING & MANUFACTURING COMPANY
7-2ND BAHARESTAN ST.-PASDARAN AVE.-TEHRAN-IRAN
WWW.SHOMAL.COM
E-MAIL : SHOMAL@SHOMAL.COM

THIS IS A CAD DRAWING & MUST BE EDITED AT SOURCE.
ALL DIMENSIONS ARE IN MM UNLESS OTHERWISE STATED.
GENERAL TOLERANCES UNLESS OTHERWISE STATED IS ACCORDING TO DIN 7168A.

DESCRIPTION	NAME	DATE			MATERIAL:
DESIGNED BY:	H.Arabsahi	02	03	03	SHEET 1 OF 2
DRAWN BY:	M.Darabi	21	02	12	SIZE: A4
APPROVED BY:	F.Alsafi	20	10	12	SCALE (N.T.S.)

TITLE : ADAPTOR 600 SERIES

REV. NO: G

RELATED CERTIND: TÜV11ATEX7157U.

TÜV Rheinland Industrial Services 135617

THREAD TYPE	THREAD SIZE[ii]	DIMENSIONS[i]													
		FEMALE							MALE					R BAND	
		A1[iii]	A2	X1	A3*	A11**	A4*	S	A5[v]	A6	X2	A7	X3	A8[iv]	A9
ISO (METRIC)	16	24	M16*1.5	4	17	20	22	4.4	15	9.5	3.25	M16*1.5	2.0	5	23
	20	24	M20*1.5	2	17	20	22	2.4	15	14	3	M20*1.5	2.0	5	23
	25	30	M25*1.5	2.5	17	20	22	2.6	15	20	2.5	M25*1.5	2.0	5	29
	32	36	M32*1.5	2	17	20	22	2.4	15	26.5	2.75	M32*1.5	2.0	5	35
	40	44	M40*1.5	2	17	20	22	2.4	15	32	4	M40*1.5	2.0	5	43
	50	55	M50*1.5	2.5	17	20	22	2.9	15	44	3	M50*1.5	2.0	5	54
	63	68	M63*1.5	2.5	17	20	22	2.9	15	56	3.5	M63*1.5	2.0	5	67
	75	80	M75*1.5	2.5	17	20	22	2.9	15	68	3.5	M75*1.5	2.0	5	79
	90	100	M90*1.5	5	17	20	22	5.4	15	82	4	M90*1.5	2.0	5	99
NPT	1/2"	26	1/2"NPT	2.35	18	21	24	3.1	14	14	3.65	1/2"NPT	3.0	5	24
	3/4"	32	3/4"NPT	2.7	18.5	21.5	25	4.0	14	20	3.3	3/4"NPT	3.5	5	31
	1"	38	1"NPT	2.3	23	26	29.5	4.0	17.5	27	3.2	1"NPT	3.5	5	37
	1 1/4"	48	1 1/4"NPT	2.95	23.5	26.5	30	5.0	18	34	4.05	1 1/4"NPT	3.5	5	47
	1 1/2"	55	1 1/2"NPT	3.4	24	27	30.5	5.1	18.5	40	4.1	1 1/2"NPT	3.5	5	53
	2"	68	2"NPT	3.85	25	28	32	5.6	19.5	50	5.15	2"NPT	4.0	5	64
	2 1/2"	80	2 1/2"NPT	3.5	37	40	44	6.3	29	60	6.5	2 1/2"NPT	4.0	5	77
	3"	95	3"NPT	3.05	38.5	41.5	45.5	5.9	30.5	75	6.95	3"NPT	4.0	5	94
	3 1/2"	110	3 1/2"NPT	4.2	40	43	48	7.1	32	88	6.8	3 1/2"NPT	5.0	5	106
	4"	125	4"NPT	5.35	41	44	49	8.3	33	100	7.15	4"NPT	5.0	5	119
BSPP	1/2"	25	1/2"BSPP	2.05	17	20	22	2.7	15	14	3.45	1/2"BSPP	2.0	5	24
	5/8"	27	5/8"BSPP	2.05	17	20	22	2.8	15	14	4.45	5/8"BSPP	2.0	5	26
	3/4"	31	3/4"BSPP	2.3	17	20	22	3.0	15	20	3.2	3/4"BSPP	2.0	5	29
	1"	38	1"BSPP	2.4	22	25	28	3.4	20	26.5	3.35	1"BSPP	3.0	5	36
	1 1/4"	46	1 1/4"BSPP	2.05	22	25	28	3.1	20	32	4.95	1 1/4"BSPP	3.0	5	45
	1 1/2"	53	1 1/2"BSPP	2.6	22	25	28	3.6	20	32	7.9	1 1/2"BSPP	3.0	5	52
	2"	65	2"BSPP	2.7	22	25	28	3.7	20	44	7.8	2"BSPP	3.0	5	64
	2 1/2"	82	2 1/2"BSPP	3.45	22	25	28	4.4	20	56	9.55	2 1/2"BSPP	3.0	5	79
	3"	93	3"BSPP	2.6	22	25	28	3.6	20	68	9.9	3"BSPP	3.0	5	92

i. ALL DIMENSIONS ARE IN MILLIMETRES.

ii. THREAD FORMS ARE BETWEEN M16 TO M90 TO BS 3643 1981; THE MALE BEING SMALLER THAN FEMALE BY NO MORE THAN ONE STANDARD SIZE (AS SPECIFIED BY BS 6121 : 1989).

iii. A1 IS MINIMUM, LARGER HEXAGONS MAY BE USED.

iv. SHOULD ADAPTORS BE STAMPED ON THE HEXAGON FLATS, THEN A8=0, AND A9 IS NOT APPLICABLE.

v. A5 IS MINIMUM STANDARD THREAD LENGTH, LONGER LENGTHS MAY BE USED (e.g. EFFECTIVE vs. OVERALL LENGTH FOR NPT THREAD FORM).

* MINIMUM

** MAXIMUM

TITLE : ADAPTORS 300 SERIES

DESCRIPTION	NAME	DATE			MATERIAL
DESIGNED BY	H.Arabsahi	02	03	03	SHEET SIZE A3
DRAWN BY	M.Dorabi	21	02	12	SCALE 1:1
APPROVED BY	F.Alsafi	20	10	12	DATE N.T.S.

TÜV Rheinland Industrial Services 135617

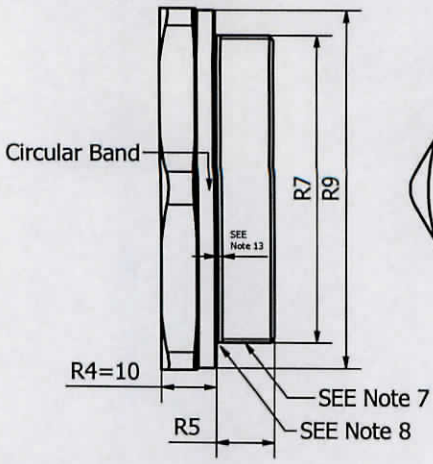

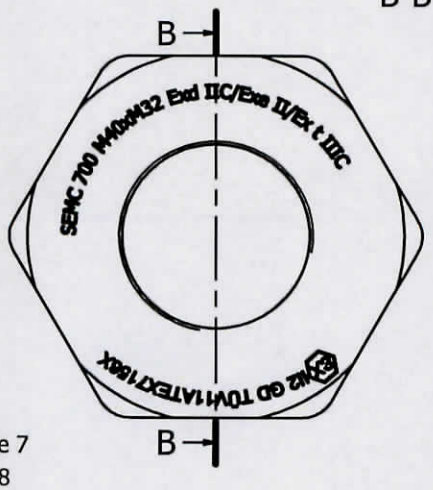

B-B (1 : 1.2)

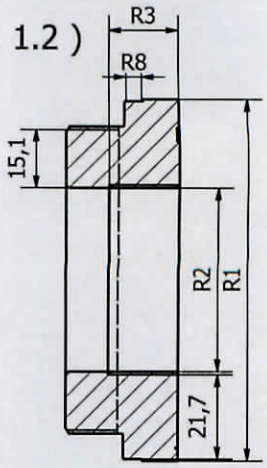

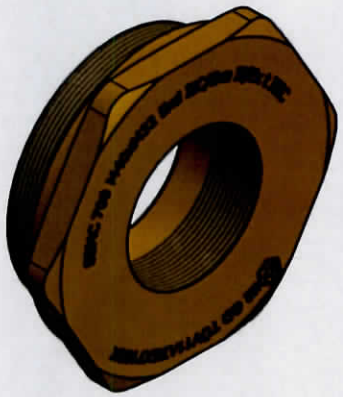

NOTES:

1. FUNCTION: PROVIDES A MEANS OF OUTDOOR OR INDOOR CONNECTION BETWEEN CABLE ENTRY DEVICES AND EQUIPMENT HAVING DISSIMILAR THREADS.
2. SPECIFICATION: Ⓔx II 2 GD "Ex d IIC / Ex e IIC / Ex t IIIC" IN ACCORDANCE WITH THE RELEVANT REQUIREMENTS OF "EN 60079-0: 2009" AND "EN 60079-1: 2007" AND "EN 60079-7: 2007" AND "EN 60079-31: 2009".
3. APPROVAL : SUITABLE FOR USE ON ANY ZONE 1, ZONE 2, ZONE 21, AND ZONE 22, APPROVED EQUIPMENT HAVING FLAMEPROOF "Ex d" OR INCREASED SAFETY "Ex e" METHODS OF PROTECTION.
4. CERTIFICATION: COMPONENT CERTIFICATE No.: TÜV11ATEX 7157U FOR REDUCERS WITH FEAMALE THREAD OTHER THAN ISO METRIC THREAED FORM, AND EQUIPMENT CERTIFICATE No.: TÜV11ATEX7156X FOR REDUCERS WITH ISO METRIC FEMALE THREAD FORM.
5. MATERIAL: BRASS TO BS EN 12164: 2011 Grades CW604N & CW614N AND BS EN 12167: 2011 Grade CW612N OR EQUIVALENT HAVING THE SAME OR GREATER TENSILE STRENGTH; ALUMINUM TO BS 1474:1972, GRADE HE30 (LESS THAN 6% Mg) OR EQUIVALENT HAVING THE SAME OR GREATER TENSILE STRENGTH; MILD STEEL TO BS 970:1991 part 1 Grade 220 M07; STAINLESS STEEL TO BS 970: 1991 Part 1 Grades 302S31, 303S31, 303S42, 304S11 304S15, 304S31, 316S11, 316S13, 316S31, 316S33. BS970:1987 part 4 Grades 302S25, 303S21, 303S41, 304S12, 304S15, 316S12, 316S16.
6. FINISH: REDUCERS MAY BE COATED OR PLATED TO SUIT THE APPLICATION (6 TO 20 MICRONS).
7. ALTERNATIVE EQUIVALENT THREAD FORMS :
   I. ISO TO BS 3643 : 1981 MEDIUM FIT, 6G FOR EXTERNAL THREADS, 6H FOR INTERNAL THREADS.
   II. NPT TO USAS B 2.1 : 1968 GAUGING TO CLAUSE 36.
   III. BSPP TO BS 2779 : 1993 CLASS A FULL FORM FOR EXTERNAL THREADS.
8. NO UNDER CUT PERMITTED; THE THREAD IS RUN OUT HERE: DIE TO SCREW UP TO 1.5 MM GAUGE FACE FROM THE LAST FULL THREAD.
9. ALL DIMENSIONS ARE IN MILLIMETRES AND ARE SHOWN IN DWG NO. 700 SHEET 2/2.
10. TOLERANCES: ±0.2 FOR ALL DIMENSIONS.
11. MARKING METHOD: SURFACE ENGRAVING.
12. MARKING DETAILS: ALL REDUCERS ARE TO BE STAMPED ON THE CIRCULAR BAND OR ON THE HEXAGON HEAD AS SHOWN ON THE ABOVE DRAWING, e.g SEMC 700 M40 * M32 Ex d IIC / Ex e IIC / Ex t IIIC A II2 GD TÜV11ATEX7156X.
13. INGRESS PROTECTION: REDUCERS SATISFIES THE REQUIREMENTS OF THE IP66 TO BS EN 60529:1992 BY THE USE OF A CAPTIVE O-RING (SEE NOTE 14).
14. MATERIAL FOR THE CAPTIVE O-RING IS ETHYLENE PROPYLENE DIEN MONOMER (EPDM).

SHIMAL ENGINEERING & MANUFACTURING COMPANY
7-2ND BAHAREESTAN ST.-PASDARAN AVE.-TEHRAN-IRAN
WWW.SHIMAL.COM
E-MAIL : SHIMAL@SHIMAL.COM

THIS IS A CAD DRAWING & MUST BE EDITED AT SOURCE.
ALL DIMENSIONS ARE IN MM UNLESS OTHERWISE STATED.
GENERAL TOLERANCES UNLESS OTHERWISE STATED IS ACCORDING TO DIN 7168m.

DESCRIPTION	NAME	DATE			MATERIAL:
DESIGNED BY:	H.Arabsahl	02	03	03	SHEET: 1 OF 2
DRAWN BY:	M.Darabi	21	02	12	SIZE: A3
APPROVED BY:	F.Alsafi	20	10	12	SCALE : N.T.S

TITLE : REDUCER 700 SERIES
REV. NO: G
RELATED CERT.NO: TÜV11ATEX7157U.

TÜV Rheinland Industrial Services 135617

THREAD TYPE	THREAD SIZE"	DIMENSIONS							
		FEMALE			MALE			CIRCULAR BAND	
		R2	R3	R4[iv]	R1[iii]	R5[v]	R7	R8	R9
ISO (METRIC)	16	M16*1.5	17	10	-	-	-	-	-
	20	M20*1.5	17	10	24	15	M20*1.5	5	23
	25	M25*1.5	17	10	30	15	M25*1.5	5	29
	32	M32*1.5	17	10	36	15	M32*1.5	5	35
	40	M40*1.5	17	10	44	15	M40*1.5	5	43
	50	M50*1.5	17	10	55	15	M50*1.5	5	54
	63	M63*1.5	17	10	68	15	M63*1.5	5	67
	75	M75*1.5	17	10	80	15	M75*1.5	5	79
	90	M90*1.5	17	10	100	15	M90*1.5	5	99
NPT	1/2"	1/2"NPT	19.8	10	25	14	1/2"NPT	5	24
	3/4"	3/4"NPT	23	10	32	14	3/4"NPT	5	31
	1"	1"NPT	27.5	10	38	17.5	1"NPT	5	37
	1 1/4"	1 1/4"NPT	28.5	10	48	17.5	1 1/4"NPT	5	47
	1 1/2"	1 1/2"NPT	29	10	54	18.1	1 1/2"NPT	5	53
	2"	2"NPT	31	10	65	19.5	2"NPT	5	64
	2 1/2"	2 1/2"NPT	40	10	78	29	2 1/2"NPT	5	77
	3"	3"NPT	41.5	10	95	30.5	3"NPT	5	94
	3 1/2"	3 1/2"NPT	42.7	10	107	32	3 1/2"NPT	5	106
	4"	4" NPT	-	-	120	33	4"NPT	5	119
BSPP	1/2"	1/2"BSPP	17	10	25	15	1/2"BSPP	5	24
	5/8"	5/8"BSPP	17	10	27	15	5/8"BSPP	5	26
	3/4"	3/4"BSPP	17	10	30	15	3/4"BSPP	5	29
	1"	1"BSPP	22	10	37	20	1"BSPP	5	36
	1 1/4"	1 1/4"BSPP	22	10	46	20	1 1/4"BSPP	5	45
	1 1/2"	1 1/2"BSPP	22	10	53	20	1 1/2"BSPP	5	52
	2"	2"BSPP	22	10	65	20	2"BSPP	5	64
	2 1/2"	2 1/2"BSPP	22	10	80	20	2 1/2"BSPP	5	79
	3"	3"BSPP	22	10	93	20	3"BSPP	5	92

i. ALL DIMENSIONS ARE IN MILLIMETRES.

ii. THREAD FORMS ARE BETWEEN M16 TO M90 TO BS 3643 1981; THE MALE IS EQUAL OR LARGER THAN THE FEMALE THREAD SIZE.

iii. R1 IS MINIMUM, LARGER HEXAGONS MAY BE USED.

iv. SHOULD REDUCERS BE STAMPED ON THE HEXAGON HEAD, THEN R8=0 AND R9 IS NOT APPLICABLE.

v. R5 IS MINIMUM STANDARD THREAD LENGTH, LONGER LENGHTS MAY BE USED (e.g. EFFECTIVE vs. OVERALL LENGTH FOR NPT THREAD FORM).

SEMC

TITLE REDUCER 700 SERIES

DESIGNED BY H.Arabsahi 02 03 03

M.Darabi 21 02 12

F.Alsafi 20 10 12

TÜV Rheinland Industrial Services 135617

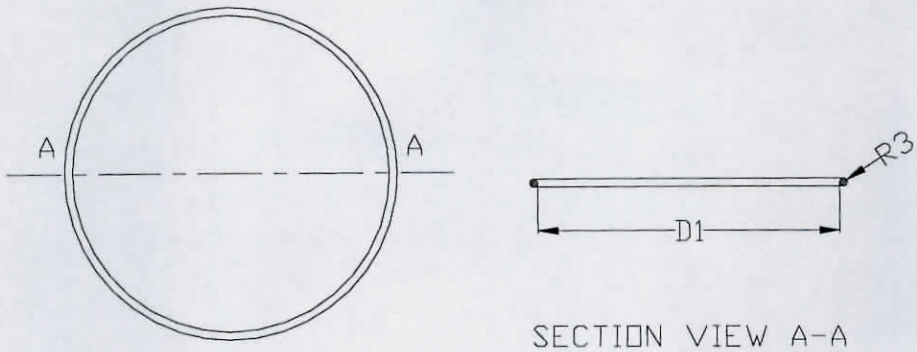

NOTES:

1. MATERIAL: ETHYLENE PROPYLENE DIEN MONOMER (EPDM).
2. HARDNESS: 70±4 SHORE A
3. OPERATING TEMPERATURE: -20 TO 100°C
4. TOLERANCE: ±0.2MM.
5. DIMENSIONS: SEE SHEET 2 OF 2.

SEMC FLAMEPROOF TYPE "d" & "e" PLUG					
					SHOMAL ENG & MFG. CO. (Pirooz)
C	21/02/12	A.B	F.A	Approved	
B	20/05/03	R.E.	S.Z.	First Issue	No.5, 2ND BAHARESTAN ST. PASDARAN AVE. TEHRAN-19586-54641 IRAN
REV	DATE	CTRL	SIG	MODIFICATION	
900	NTS	53A7158	1/2	GENERAL DRAWING	
DWG No.	SCALE	JOB No.	SHEET	TITLE	S.E.M.C

† THIS IS A CAD DRAWING AND MUST BE EDITED AT SOURCE.

All copyright reserved: No reproduction or publication of this drawing is permitted without written notification of SHOMAL ENGINEERING AND MANUFACTURING COMPANY

TÜV Rheinland Industrial Services 135617

THREAD TYPE	THREAD SIZE	MAJOR DIAMETER	DIMENSIONS*	
			D1	R2
ISO (METRIC)	16	16	14.0	1.5
	20	20	18.0	1.5
	25	25	23.0	1.5
	32	32	30.0	1.5
	40	40	38.0	1.5
	50	50	46.0	2.0
	63	63	61.0	1.5
	75	75	75.0	1.5
	90	90	86.2	2.0
ET (IMPERIAL CONDUIT)	5/8"	15.88	14.0	1.5
	3/4"	19.05	18.0	1.5
	1"	25.40	23.0	1.5
	1 1/4"	31.75	30.0	1.5
	1 1/2"	38.10	38.0	1.5
	2"	50.80	46.0	2.0
	2 1/2"	63.50	61.0	1.5
	3"	76.20	75.0	1.5
PG	7	12.50	5.0	1.5
	9	15.20	14.0	1.5
	11	18.60	16.0	1.5
	13.5	20.40	16.0	1.5
	16	22.50	20.0	1.5
	21	28.30	25.0	1.5
	29	37.0	27.0	1.5
	36	47.0	45.0	1.5
	42	54.0	52.0	2.0
	48	59.3	57.0	2.0
NPSM	1/2"	21.34	18.0	1.5
	3/4"	26.67	23.0	1.5
	1"	33.40	30.0	1.5
	1 1/4"	42.16	38.0	1.5
	1 1/2"	48.26	46.0	2.0
	2"	60.33	58.0	2.0
	2 1/2"	73.03	70.0	2.0
	3"	88.90	86.2	2.0
	3 1/2"	101.6	98.0	2.0
	4"	114.3	115.5	2.0
NPT	1/2"	21.34	18.0	1.5
	3/4"	26.67	23.0	1.5
	1"	33.4	30.0	1.5
	1 1/4"	42.16	38.0	1.5
	1 1/2"	48.26	46.0	2.0
	2"	60.33	58.0	2.0
	2 1/2"	73.03	70.0	2.0
	3"	88.90	86.2	2.0
	3 1/2"	101.6	98.0	2.0
	4"	114.3	115.5	2.0
BSPP	1/2"	20.96	18.0	1.5
	5/8"	22.91	20.0	1.5
	3/4"	26.44	23.0	1.5
	1"	33.25	30.0	1.5
	1 1/4"	41.91	38.0	1.5
	1 1/2"	47.80	46.0	2.0
	2"	59.61	58.0	2.0
	2 1/2"	75.18	70.0	2.0
	3"	87.88	86.2	2.0
BSPT	1/2"	20.96	18.0	1.5
	5/8"	22.91	20.0	1.5
	3/4"	26.44	23.0	1.5
	1"	33.25	30.0	1.5
	1 1/4"	41.91	38.0	1.5
	1 1/2"	47.80	46.0	2.0
	2"	59.61	58.0	2.0
	2 1/2"	75.18	70.0	2.0
	3"	87.88	86.2	2.0

* ALL DIMENSIONS IN MILLIMETERESS.

SEMC FLAMEPROOF TYPE "d" & "e" PLUG

C	21/02/12	A.B	F.A	Approved
B	20/05/03	R.E.	S.Z.	First Issue
REV	DATE	CTRL	SIG	MODIFICATION
900	NTS	53A7158	2/2	GENERAL DRAWING
DWG No.	SCALE	JOB No.	SHEET	TITLE

SHOMAL ENG & MFG. CO. (Pirooz)

No.5, 2ND BAHARESTAN ST.
PASDARAN AVE.
TEHRAN-19586-54641
IRAN

S.E.M.C.

† THIS IS A CAD DRAWING AND MUST BE EDITED AT SOURCE

All copyright reserved: No reproduction or publication of this drawing is permitted without written notification of SHOMAL ENGINEERING AND MANUFACTURING COMPANY

TÜVRheinland Industrial Services 135617

Figures

SHOMAL TYPE 600 ADAPTORS

SHOMAL TYPE 700 REDUCERS

SHOMAL TYPE 800 PLUGS

TÜV Rheinland Industrial Services 136619

Technical Data:

Ⓔx II 2 G D
Ex d IIC / Ex e IIC / Ex t IIIC
Ambient Temperature -20˚C to +75˚C

IMPORTANT NOTES

I. These installation instructions give guidance on general instructions for safety and installation of chosen SHOMAL products.

II. All SHOMAL products should only be used in applications and environments as detailed in these instructions and other SHOMAL literature.

III. SHOMAL will not take responsibility for any damage, injury or form of loss caused where products are not installed or used as detailed in these instructions. If in doubt, further advice can be obtained from our Technical Department.

IV. SHOMAL is not responsible for any mistakes in product selection.

V. Adaptors/Reducers having Non-Metric female threads

Safety Instructions

1. All SHOMAL products should be installed in accordance with all relevant Installation Standards and Codes of Practice: EN60079-0:2009, EN 60079-1: 2007, EN 60079-7: 2007, EN 60079-31: 2009 and IEC60079-0:2007, 60079-1:2007 IEC60079-7:2007
2. Installation of SHOMAL products should only be carried out by an engineer trained in cable gland installation. These products shall not be used for in enclosures where the temperature at the point of mounting is out of the Ambient Range of -20°C to 75°C
3. Under no circumstances should installation be carried out under live conditions.
4. The installer should ensure that no damage occurs to any product thread forms or O-Ring seals by chamfering/de-burring tapped and clearance hole entries prior to installation. Where component is Electro plated care should be taken to prevent damage or chipping.
5. Threaded Entries: Components can be installed directly into threaded entries and the recommended torque applied.
6. Clearance Holes: Clearance holes should be no greater than 0.5mm of the major diameter of the male thread. Components installed in clearance holes should be secured with an appropriate sized locknut, fully tightening ensuring no damage or elliptical distortion of O-Ring.
7. Care should be taken that any electrical continuity is not affected.
8. Check the presence of EPDM or red fiber sealing ring if necessary on the product.

TÜV Rheinland Industrial Service 135617